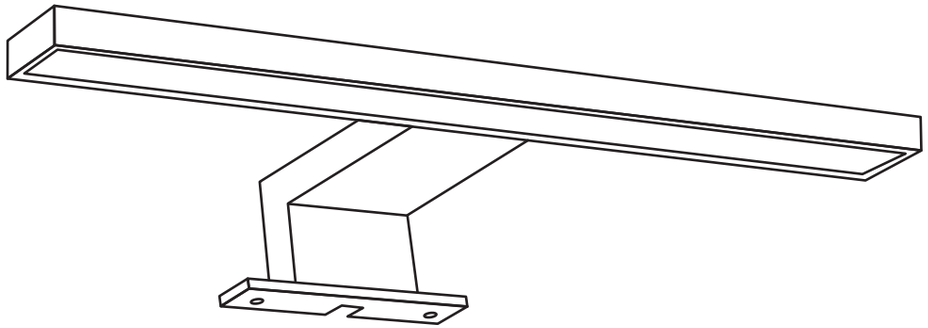

Screwdiver